32" X 32" SQ. CONVERSATION TABLE

CT-1105

BREEZESTA tm

Recycled Poly Furniture

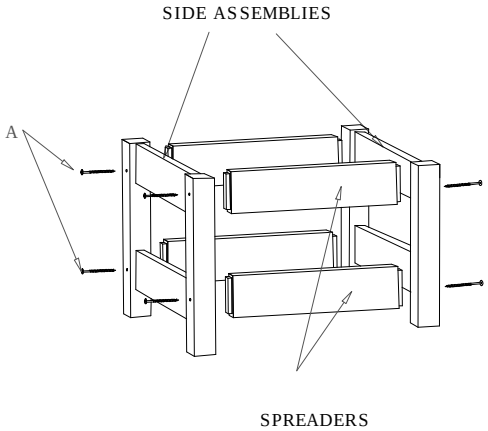

STEP 1

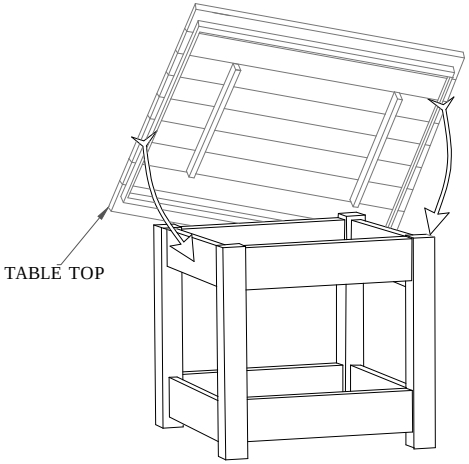

STEP 2

Place the table top on the base as shown above

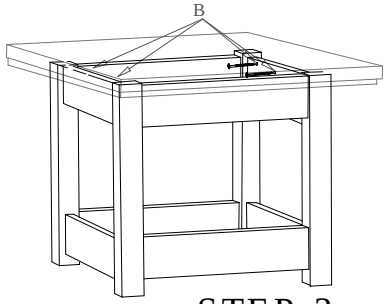

STEP 3

Attach Side Assemblies to Spreaders by placing the tenon into the mortise (pocket) and attching with screws (B) as shown.

Attach Table Top to base using uncolored screws (B). From the underside screw through pre-drilled holes into table top as shown.

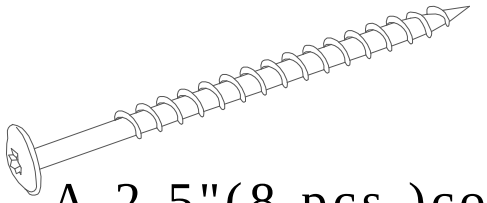

A-2.5"(8 pcs.)colored

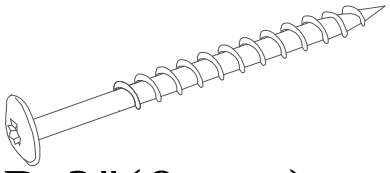

B-2"(8pcs.)uncolored

LIST OF PARTS
- Side Assemblies (2)
- Spreaders (4)
- Table Top (1)
- Colored Screws "A" (8)
- Un-Colored Screws "B" (8)
- Insert Bit Tool (1)

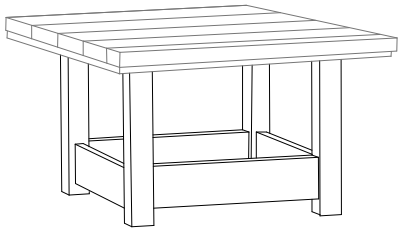

Ver 13.0

K